YOMATO LARGE GEARBOX(LOWER UNIT)

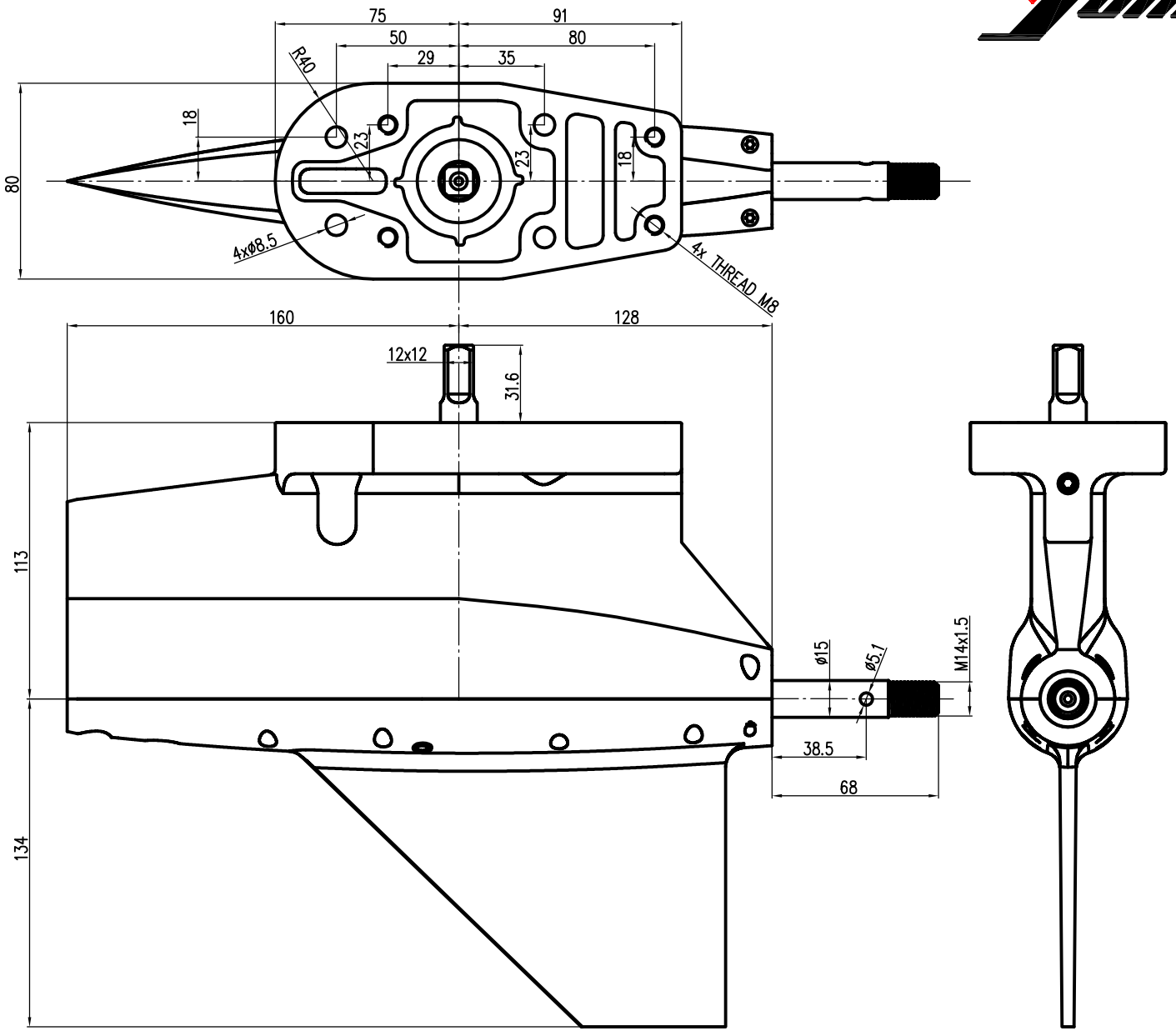

© KONNY MOTORS
WWW.KONNY.CZ

ALL DIMENSIONS IN MILIMETERS